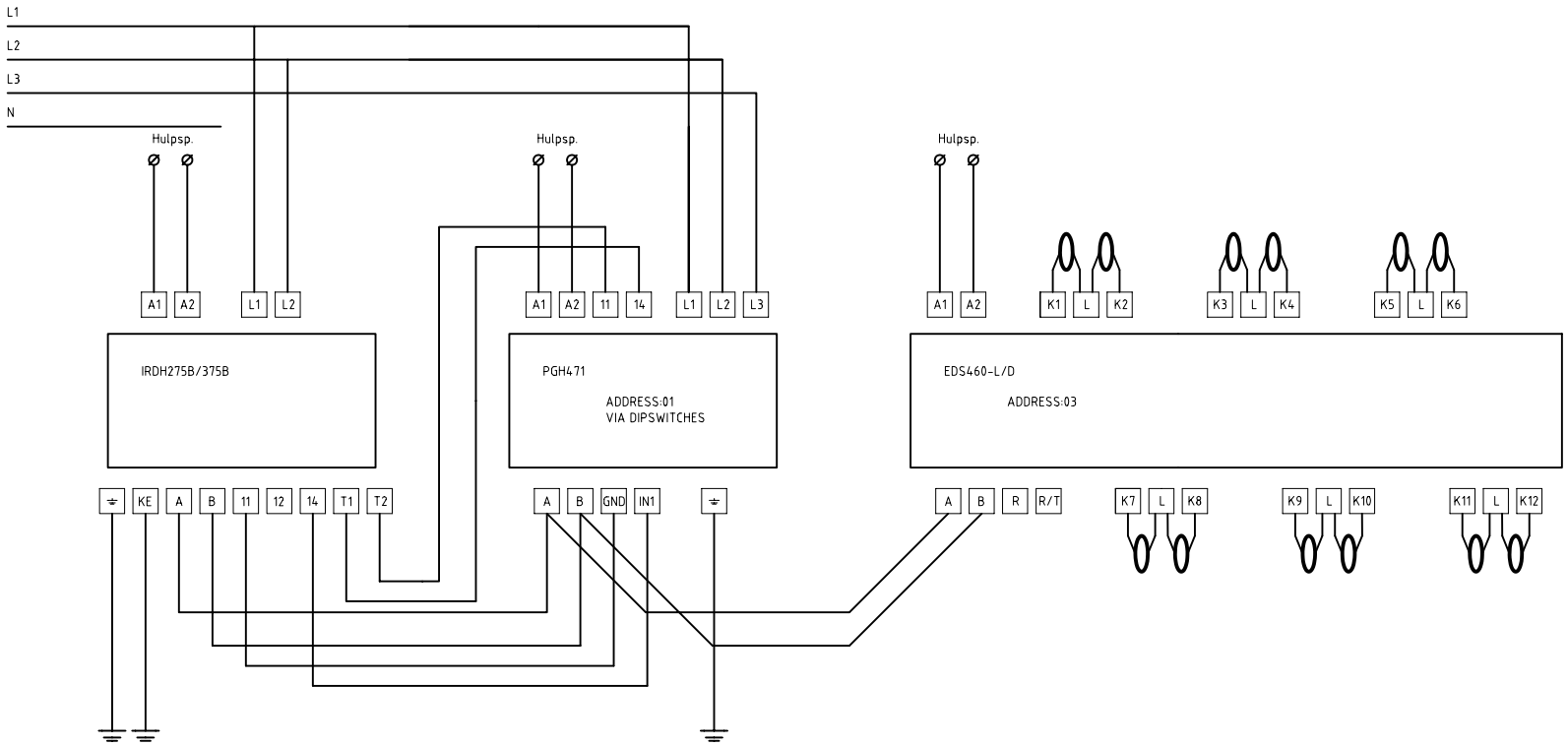

Customer				Bender Benelux BV			scale	sheet 01
							Scanning systeem EDS460	
					Date	Name	EDS selectief zoeksysteem IT	
				drawn	22-02-07	RB		
				chkd.				
				Std.				
				BENDER			07020013-RB	Pag. 1 of 1
No.	Revision	Date	by				EDS IRDH275_375 PGH471 EDS460.dwg	